Acme Sanitary Ware Co. Ltd.
1/F, Acme Building, 22-28 Nanking Street, Kowloon, Hong Kong
Tel: 2388 7171 Fax: 2710 8012
Email: acme@acmesanitary.com.hk
Website: www.acmesanitary.com.hk
Since 1949

PROJECT		REF		REV	ITEM CODE	
LOCATION		DATE			PAGE	

SANITARY WARE SPECIFICATION SHEET

Item Descriptions	EMCA (PRC) Tempered glass washbasin with chrome plated waste and overflow tube	Illustration/ Drawing
Dimensions	Diameter 360 mm	
Model	EM0142.207-360	
Material	Glass	
Manufacturer	EMCA (PRC)	
Source	Acme Sanitary Ware Co. Ltd Mr. Eric Wong/ Mr. Don Yuen	
Contact Tel/Fax E-mail Website	(852) 2388-7171 / (852) 2710-8012 acme@acmesanitary.com.hk www.acmesanitary.com.hk	

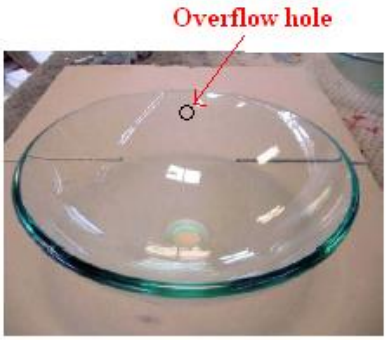

Size: 360mm diameter
12mm 圓邊圓型鋼化青光玻璃盆

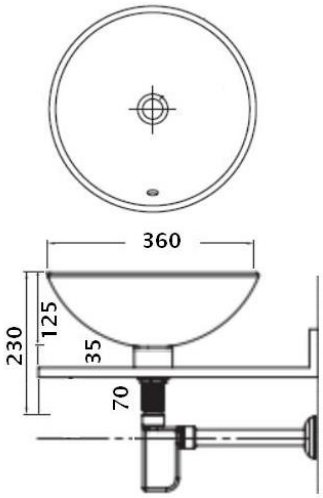

Note:

** All information of the above is for the reference only. No prior notice is made if any changes.*